UNIVERSITY OF CAMBRIDGE INTERNATIONAL EXAMINATIONS
General Certificate of Education
Advanced Subsidiary Level and Advanced Level

CANDIDATE NAME	
CENTRE NUMBER	
CANDIDATE NUMBER	

* 3 3 7 6 0 4 0 6 4 0 *

PHYSICS **9702/31**

Paper 31 Advanced Practical Skills 1 **October/November 2009**

2 hours

Candidates answer on the Question Paper.

Additional Materials: As listed in the Confidential Instructions.

READ THESE INSTRUCTIONS FIRST

Write your Centre number, candidate number and name on all the work you hand in.
Write in dark blue or black pen.
You may use a soft pencil for any diagrams, graphs or rough working.
Do not use staples, paper clips, highlighters, glue or correction fluid.
DO **NOT** WRITE IN ANY BARCODES.

Answer **both** questions.
You will be allowed to work with the apparatus for a maximum of one hour for each question.
You are expected to record all your observations as soon as these observations are made, and to plan the presentation of the records so that it is not necessary to make a fair copy of them. The working of the answers is to be handed in.
Additional answer paper and graph paper should be submitted only if it becomes necessary to do so.
You are reminded of the need for good English and clear presentation in your answers.

At the end of the examination, fasten all your work securely together.
All questions in this paper carry equal marks.

For Examiner's Use	
1	
2	
Total	

This document consists of **9** printed pages and **3** blank pages.

© UCLES 2009

BLANK PAGE

You may not need to use all of the materials provided.

For Examiner's Use

1 In this experiment you will investigate the position of a wooden rod suspended in water as the depth of the water is varied.

Assemble the apparatus, as shown in Fig. 1.1, then add water to the beaker until the mass attached to the bottom of the rod is completely covered and is not touching the bottom of the beaker.

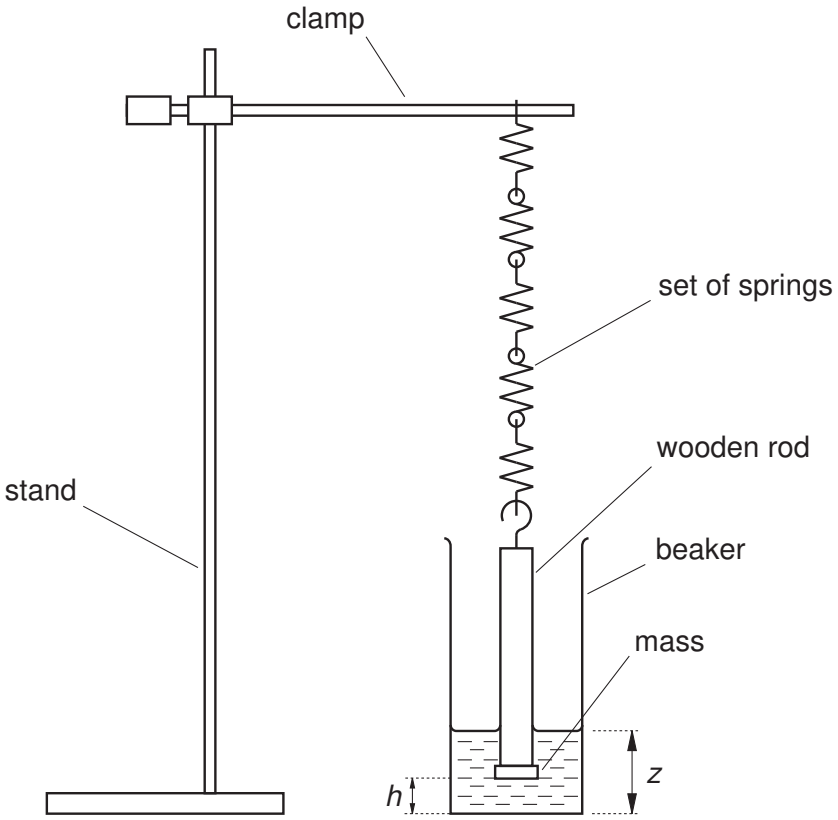

Fig. 1.1

(a) Record *h* and *z*, as shown in Fig. 1.1.

h = ... cm

z = ... cm

(b) Add more water to the beaker and repeat **(a)**. Repeat this procedure until you have six sets of readings for *h* and *z*.

For Examiner's Use

(c) **(i)** Plot a graph of *z* on the *y*-axis against *h* on the *x*-axis. Draw the line of best fit.

(ii) Determine the gradient of the line.

gradient = ...

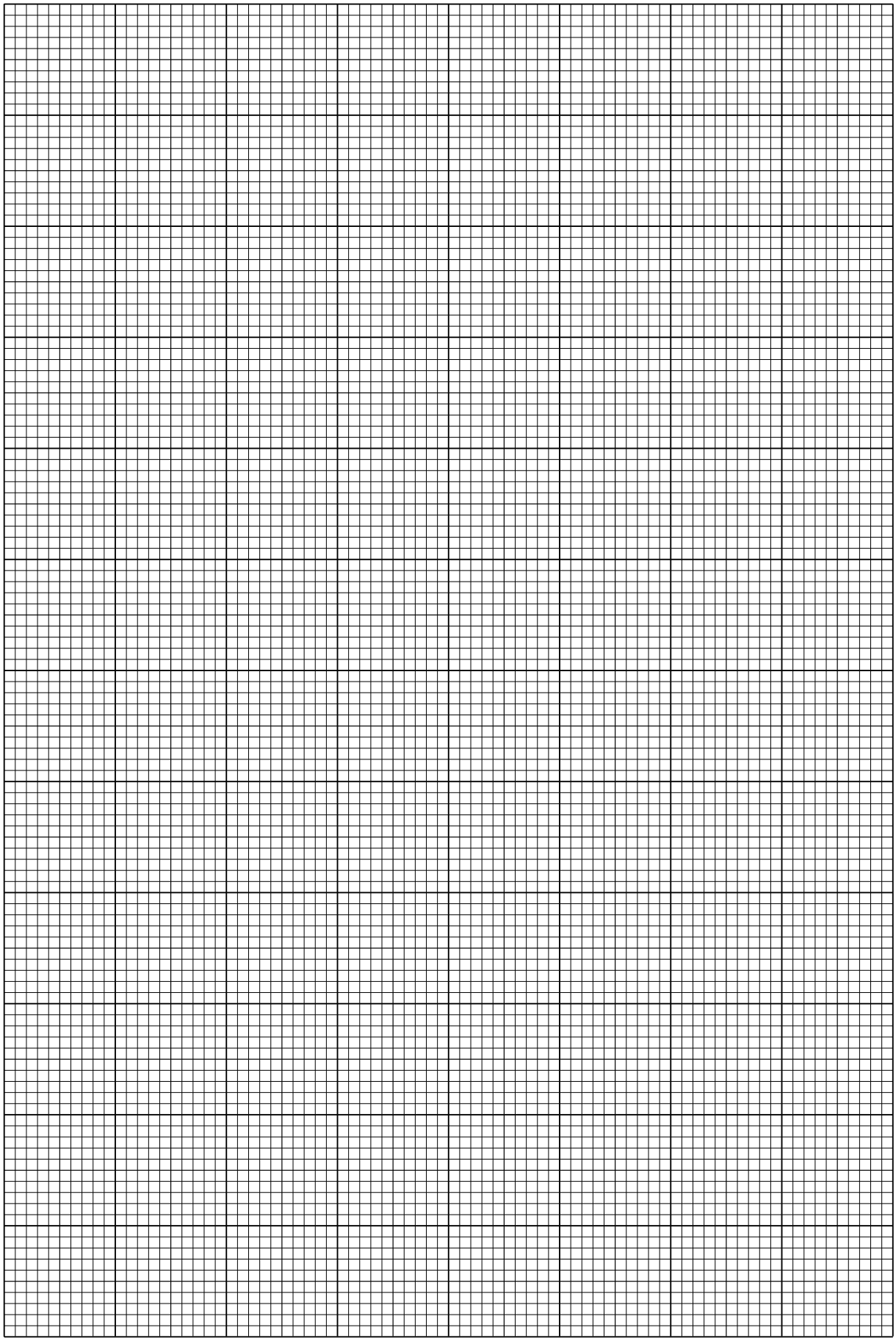

For Examiner's Use

(d) (i) Use the vernier calipers to determine the diameter d of the wooden part of the rod.

For Examiner's Use

d = ...

(ii) Calculate the cross-sectional area A of the wooden part of the rod, using the relationship

$$A = \frac{\pi d^2}{4}.$$

A = ... m^2

(e) The relationship between z and h is

$$z = c + h\left(\frac{k}{\rho A g} + 1\right)$$

where c is a constant, k is the spring constant, ρ is the density of water ($1000\,kg\,m^{-3}$), and g is the acceleration of free fall ($9.81\,m\,s^{-2}$).

Using your answers from **(c)(ii)** and **(d)(ii)**, determine the value of k. Give an appropriate unit.

k =.....

© UCLES 2009

BLANK PAGE

Please turn over for Question 2.

You may not need to use all of the materials provided.

For Examiner's Use

2 In this experiment you are provided with a ball suspended by a thread. You will investigate how the recoil distance is related to the length of the thread when the ball is struck by a moving marble.

(a) Assemble the apparatus, as shown in Fig. 2.1, with the thread clamped between the two wooden blocks so that l is about 50 cm.

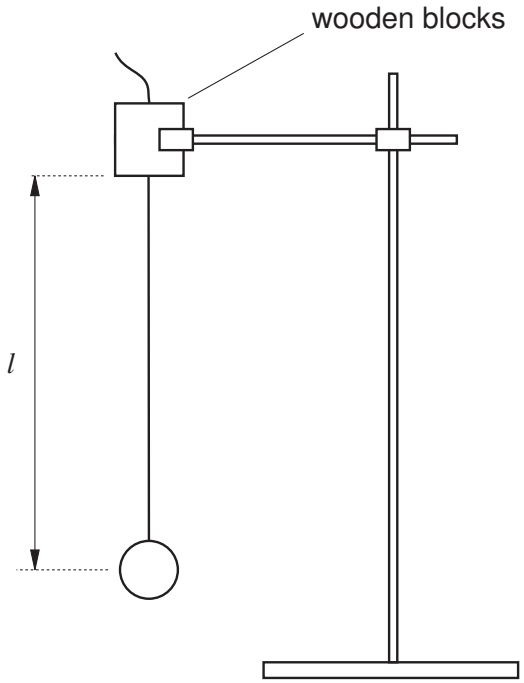

Fig. 2.1

Measure l.

l = ...

(b) Further assemble the apparatus, as shown in Fig. 2.2. When the marble is released from rest, it rolls down the tube and hits the centre of the ball.
Adjust the tilt of the tube so that the recoil distance *d* of the ball is about 20 cm.

For Examiner's Use

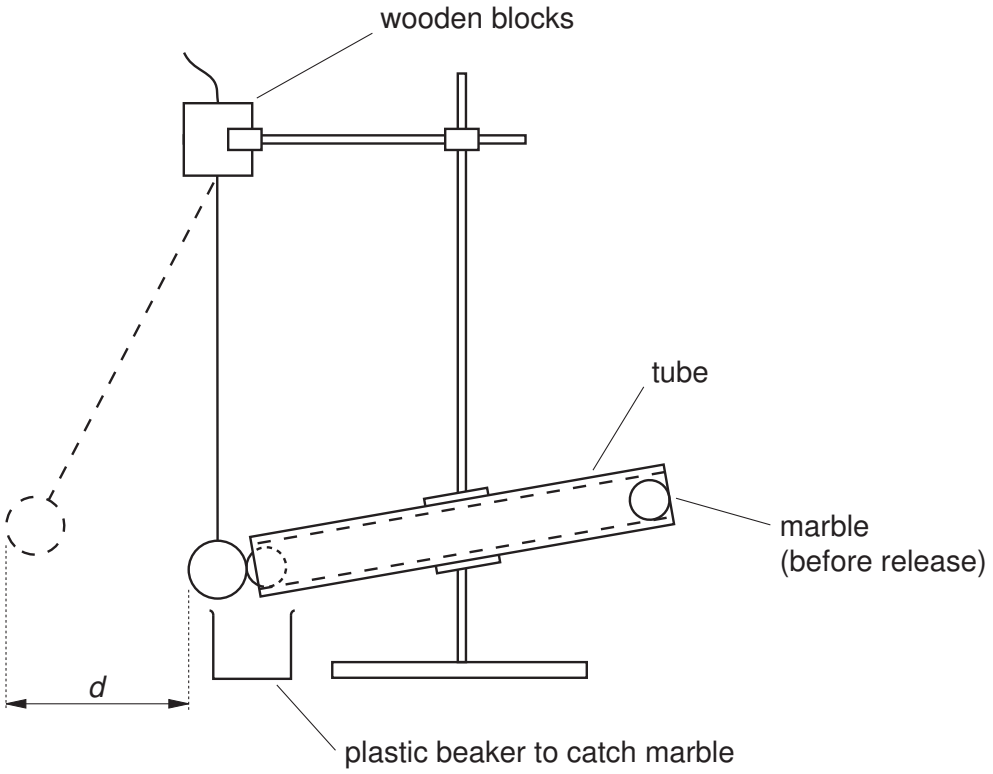

Fig. 2.2

(i) Measure *d*.

d = ...

(ii) Explain how you used the apparatus to ensure that *d* was measured as accurately as possible.

.....

.....

.....

.....

.....

(iii) Estimate the percentage uncertainty in d.

For Examiner's Use

percentage uncertainty in d = ...

(c) If air resistance is ignored, theory predicts that

$$k = l - \sqrt{l^2 - d^2}$$

where k is a constant.

(i) Calculate a value for k.

k = ...

(ii) Justify the number of significant figures you have given for your value of k.

.....

.....

.....

(d) **Without changing the position of the tube**, shorten the thread to give a different value of l. Lower the clamp holding the thread to reposition the ball at the end of the tube, and then determine values of l, d and k for the new arrangement.

l = ...

d = ...

k = ...

© UCLES 2009

(e) By explaining whether your results indicate that k is constant, show whether the relationship in **(c)** is supported.

For Examiner's Use

.....

.....

.....

.....

(f) **(i)** State four sources of error or limitations of the procedure in this experiment.

1. .....

.....

2. .....

.....

3. .....

.....

4. .....

.....

(ii) Suggest four improvements that could be made to this experiment. You may suggest the use of other apparatus or different procedures.

1. .....

.....

2. .....

.....

3. .....

.....

4. .....

.....

© UCLES 2009

BLANK PAGE

Permission to reproduce items where third-party owned material protected by copyright is included has been sought and cleared where possible. Every reasonable effort has been made by the publisher (UCLES) to trace copyright holders, but if any items requiring clearance have unwittingly been included, the publisher will be pleased to make amends at the earliest possible opportunity.

University of Cambridge International Examinations is part of the Cambridge Assessment Group. Cambridge Assessment is the brand name of University of Cambridge Local Examinations Syndicate (UCLES), which is itself a department of the University of Cambridge.